WIRING DIAGRAM - TR7 - 1976 AND 1977 UK AND EUROPEAN MARKET

RIGHT-HAND AND LEFT-HAND STEERING
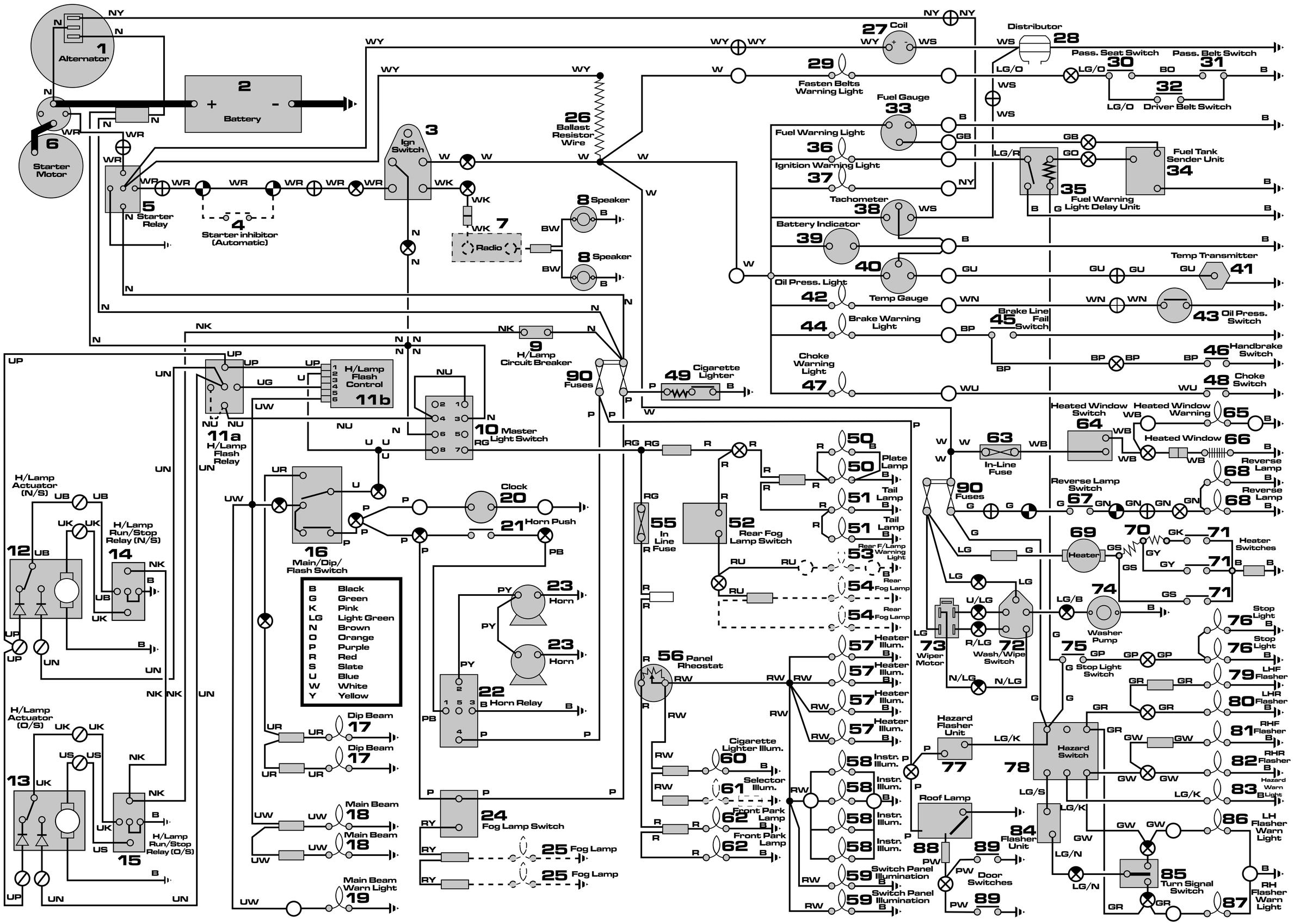
Created by John Mimer - Old to New Restorations (https://oldtonewrestorations.com/category/triumphtr7restoration/) from original workshop manual wiring diagram